ACION 8000 Series

A8KQRR/DRR Quad/Dual Return Receiver

A8KQRR and A8KDRR – Quad/Dual Return Receiver is an integral part of return path system applications. 3RU in height and up to 12 modules can reside in the 19-inch high-density chassis (A8KMF3).

Features

- 1U 19“ rack housing
- Wide optical input range
- 4 Return optical inputs and 4 Return RF outputs (A8KQRR)
- 2 Return optical inputs and 2 Return RF outputs (A8KDRR)
- Maximum of 48 returns for Quad receiver modules or 24 returns for Dual receiver modules per chassis
- Wide optical input range
- Front optical inputs and rear RF outputs
- Optical wavelength: 1200 to 1600 nm
- Hot-swappable
- Remote monitor and control function by HMS or SNMP
- Stand alone receivers with no redundancy or with A/B switch for redundant receivers (optional)
- A8KQRR & A8KQRR-AB AGC(optional)

Application

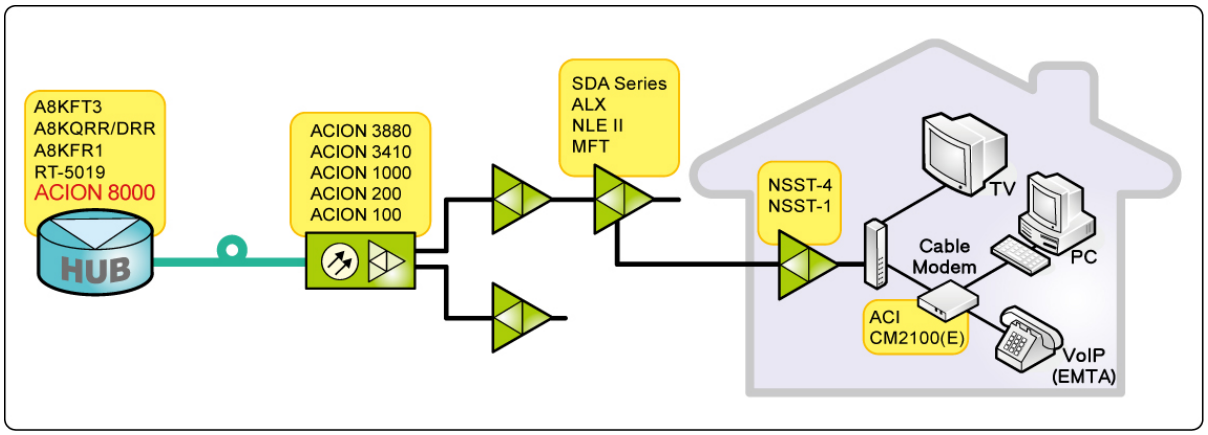

Block Diagrams

A8KDRR

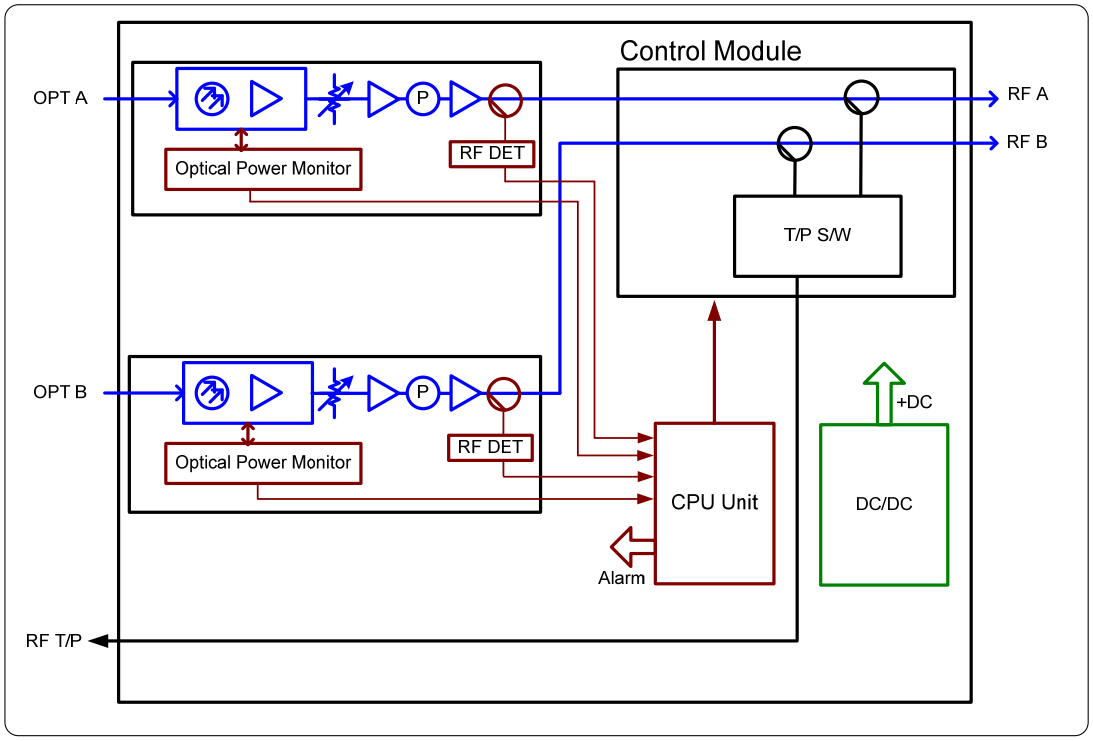

A8KDRR-AB

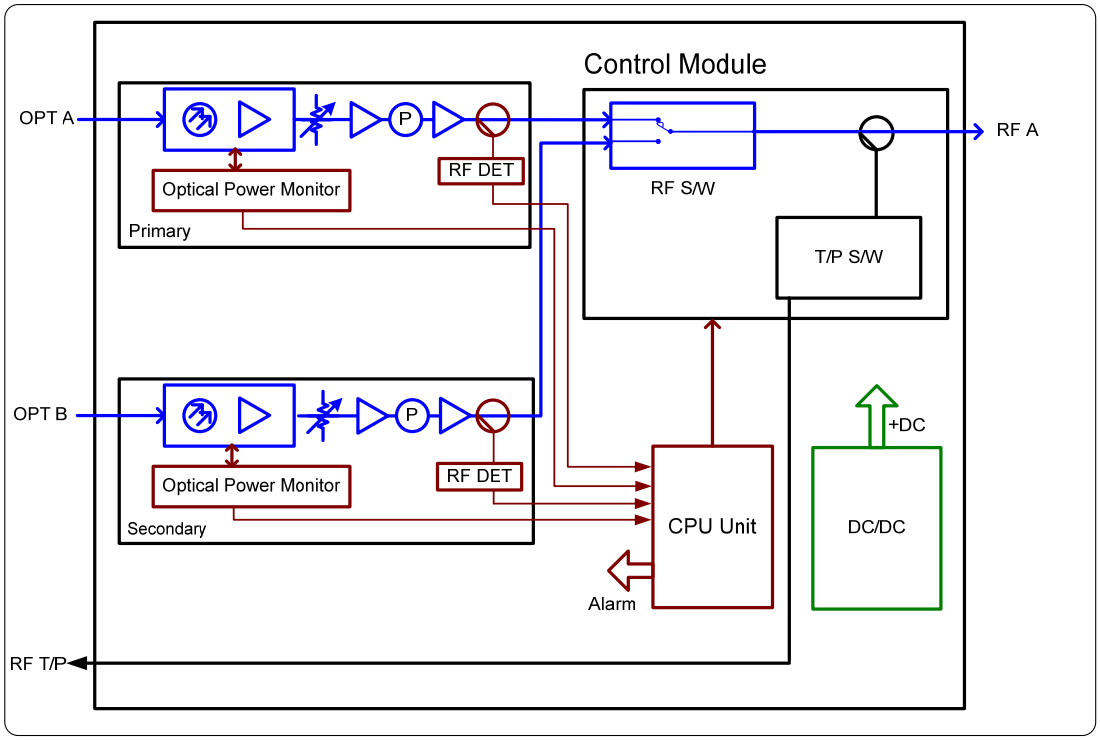

A8KQRR

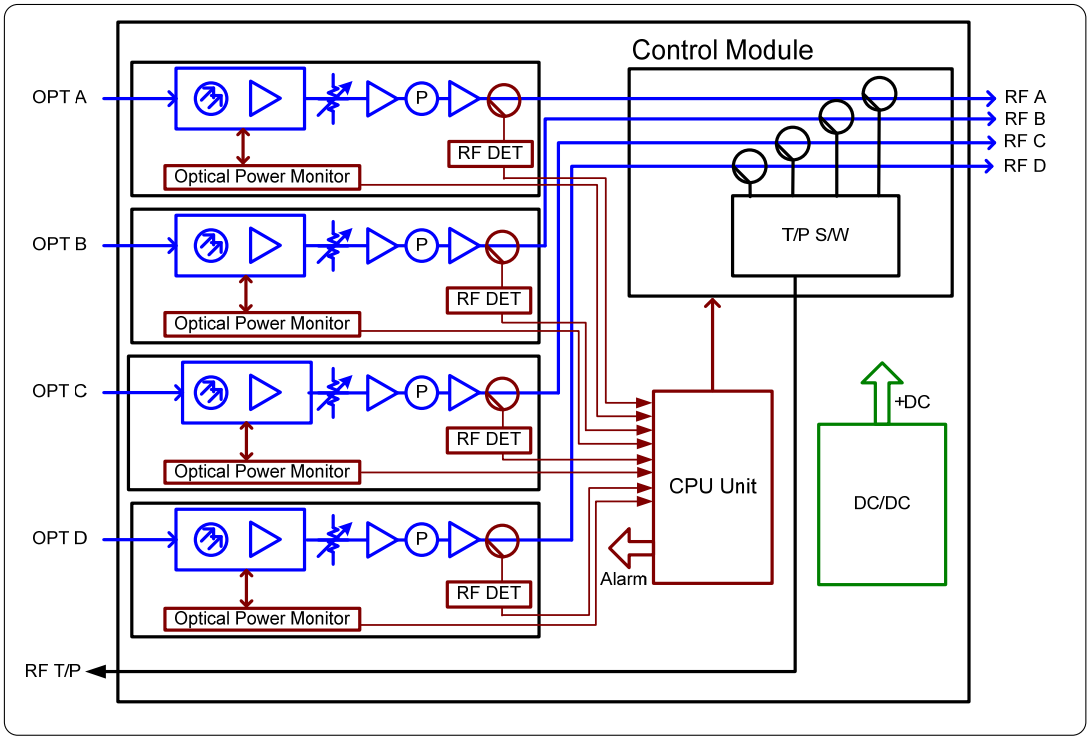

A8KQRR-AB

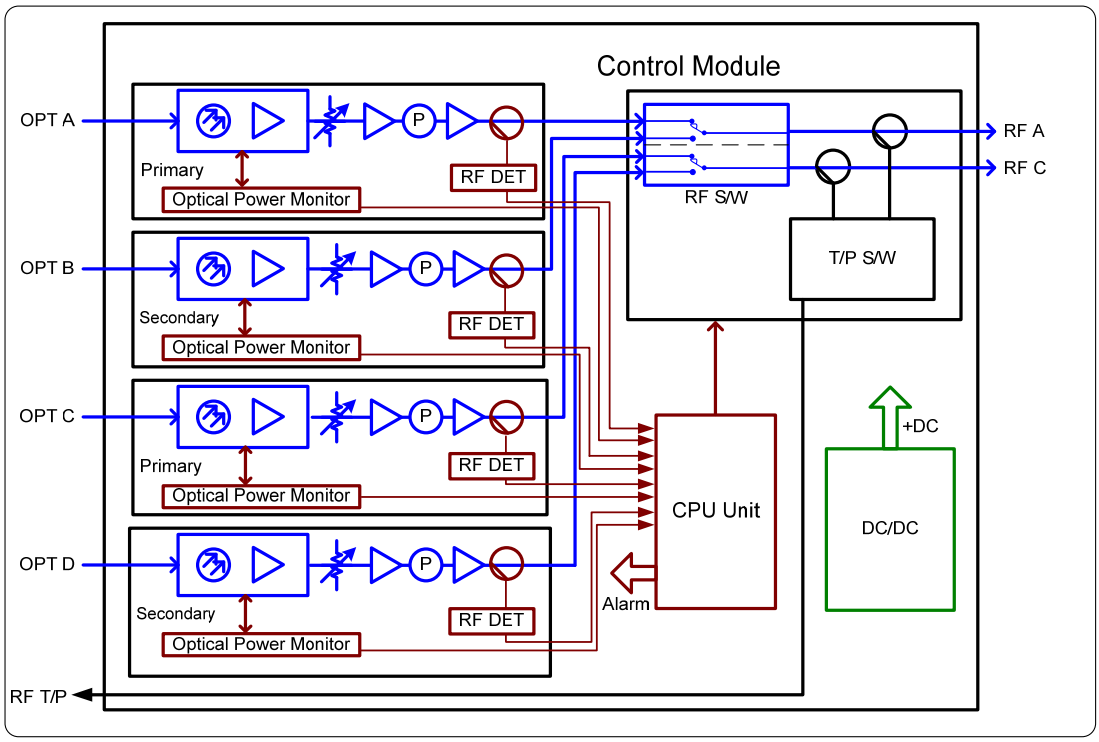
Control Module
OPT A
OPT B
OPT C
OPT D
Primary
Secondary
Primary
Secondary
Optical Power Monitor
Optical Power Monitor
Optical Power Monitor
Optical Power Monitor
P
RF DET
RF S/W
T/P S/W
RF A
RF C
CPU Unit
Alarm
+DC
DC/DC
RF T/P

Specifications

ACI	ACION 8000 Series A8KQRR/A8KDRR Quad/Dual Return Receiver			
PARAMETERS	CONDITIONS	UNITS	SPECIFICATION	NOTES
Optical Specification				
Optical receive power		dBm	+2 ~ -15	
Wavelength		nm	1200 to 1600	
Number of receiver module			4 for QRR 2 for DRR	
A/B switching threshold		dBm	-15	For AB function model only
RF Specifications				
Impedance		Ω	75	
Return loss	Min.	dB	-16 @ 5 - 200 MHz	
Output level	Min.	dBmV	42	Note 1
RF gain adjustment	AGC Mode Tolerance RGC Mode Range	dB	2@ 0 ~ -10dBm 0 to 20	QRR only
Operating bandwidth		MHz	*5 to 200*	
Flatness	Peak to Valley	dB	± 0.5	
Slope		dB	+0.75 to -0.5	
Test point	Directional coupler	dB	-20 ± 0.5	
RF gain	A8KQRR/DRR	dB	54	Note 2
Redundancy switch time	Max.	ms	50	
Receiver to receiver isolation	5 to 200 MHz	dB	< -70	
Distortion				
Equivalent noise input	Max.	$Pa/Hz^{0.5}$	7	
Second order distortion	Max.	dBc	-58	
Third order distortion	Max.	dBc	-52	
Environment				
Module width		slot	1	
Power consumption	Max. for A8KQRR	W	17.6	
Operating temperature		˚F(˚C)	32 to 122 (0 to 50)	
Relative humidity	Non-condensing	%	0 to 95	
Optical connector			SC/UPC, SC/APC	
Dimensions	D × H × W	Inch. (mm)	16.1 x 5.0 x 1.0 (410 x 127 x 26)	

Note 1: At maximum gain with -10 dBm optical input and 10% OMI from return transmitter.
Note 2: Measured from input of first gain stage to output of module with minimum attenuation.

Ordering Matrix

A8KQRR/DRR Configuration Sheet

Customer: _____

Created By: _____ Order Date: _____

ORDERING MATRIX 2012/7/2

	1		2	3	4		5	6
A 8 K		R R				—		

1. Number of Receivers in module

D	=	2 Receivers
Q	=	4 Receivers (standard)

2. 3. 4. A/B Switch for redundant or not redundant receivers

keep blank(0 0)			=	Without A/B Switch for Non-redundant receivers
—	A	A	=	With A/B Switch and softwave AGC function (QRR only)
—	A	B	=	With A/B Switch for Redundant receivers
—	A	C	=	W/ AGC & Without A/B Switch for Non-redundant receivers (QRR only)

5. 6. Connector

S	C	=	SC/APC with shutter (standard)
F	C	=	FC/APC
E	2	=	E2000

ACI Communications, Inc.
23307 66th Avenue South
Kent, WA 98032

Rev Q 10-28-2015 Printed in U.S.A.
ACI Communications, Inc. reserves the right to discontinue the manufacture or change specifications without prior notice on any parts illustrated in this data sheet. Registered trademarks are the property of their respective owner